10_100_1000 Mbps Tri-mode Ethernet MAC Specification

Author: Jon Gao

gaojon@yahoo.com

Rev. 0.1

November 28, 2005

Ope

Ope

2 Architecture

block diagram

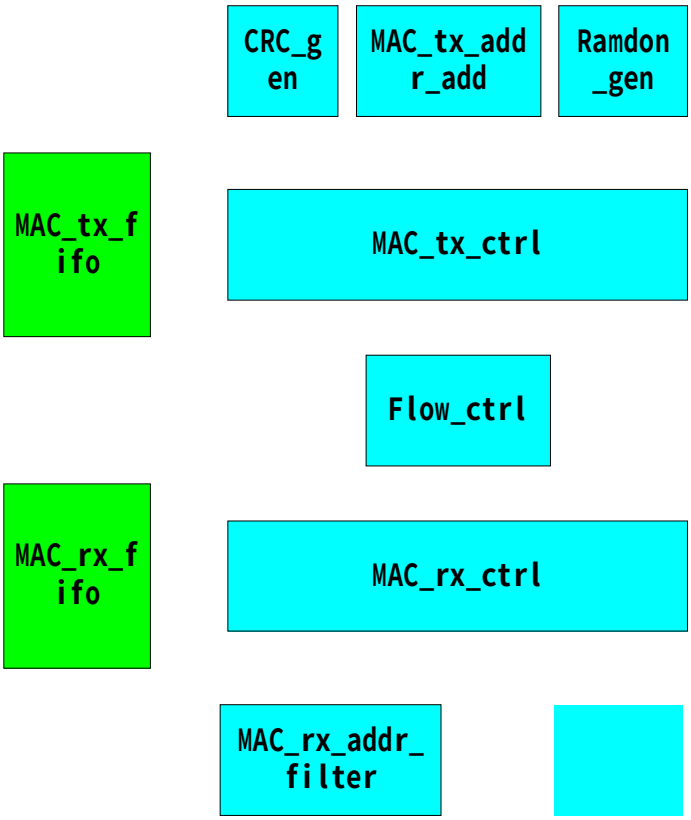

r

Ope

Co